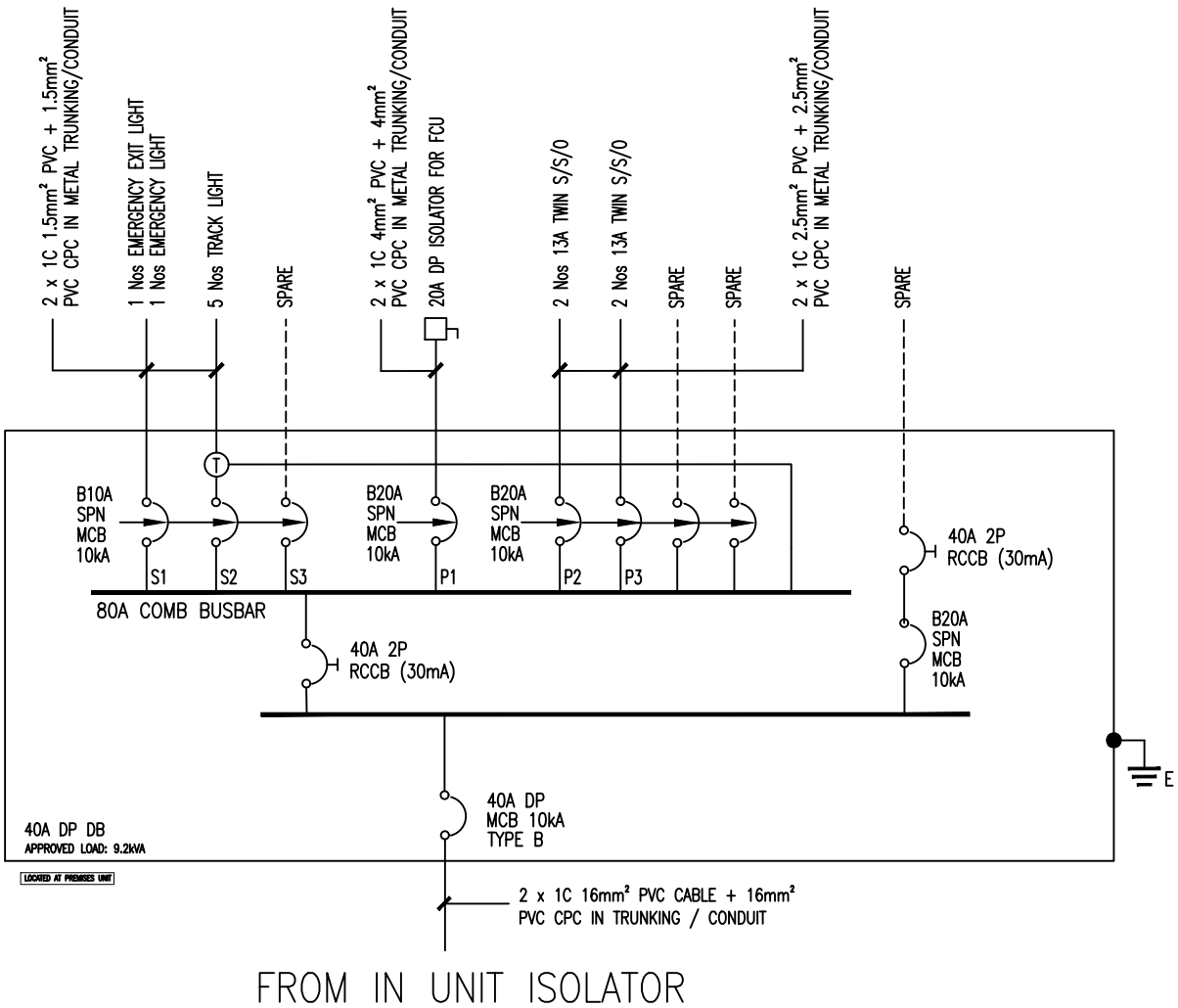

CLIENT / ADDRESS :	MAIN CONTRACTOR :	ELECTRICAL CONTRACTOR :	DRAWING TITLE :	LEW :	CHECKED :	DATE :
PROMISS WHITE SANDS MALL #02-23A 1 PASIR RIS CENTRAL ST 3 SINGAPORE 518457			SINGLE LINE DIAGRAM (SLD)	EMA LICENCED ELECTRICAL WORKER TECHNICIAN NYAP JUNN YEAN 8/33613 SINGAPORE		24 MAY 2025
					DRAWING NO. : I2R-PRO-WSM-SLD	REV : 0